Exp No 3

10/2/26 DESIGN OF WEIN BRIDGE OSCILLATOR

Aim:

To ~~dog~~ design a Wein-Bridge Oscillator, simulate it in LTspice to verify frequency of oscillation, and implementation it on a breadboard to confirm waveform generation.

Software required.

-> LTspice Simulator

Procedure:

1) Connection are given as shown in the circuit diagram.

2) Observe the o/p voltage (Vo), time period (t), from the CRO.

3) Calculate the theoretical frequency $f = \frac{1}{2\pi RC}$

4) Calculate the practical frequency by using ~~steps~~

$f = 1/T$

5) Plot the graph between o/p voltage (Vo), and time period (t).

6) Compare the practical frequency with theoretical frequency, which are approximately equal

Circuit Diagram:

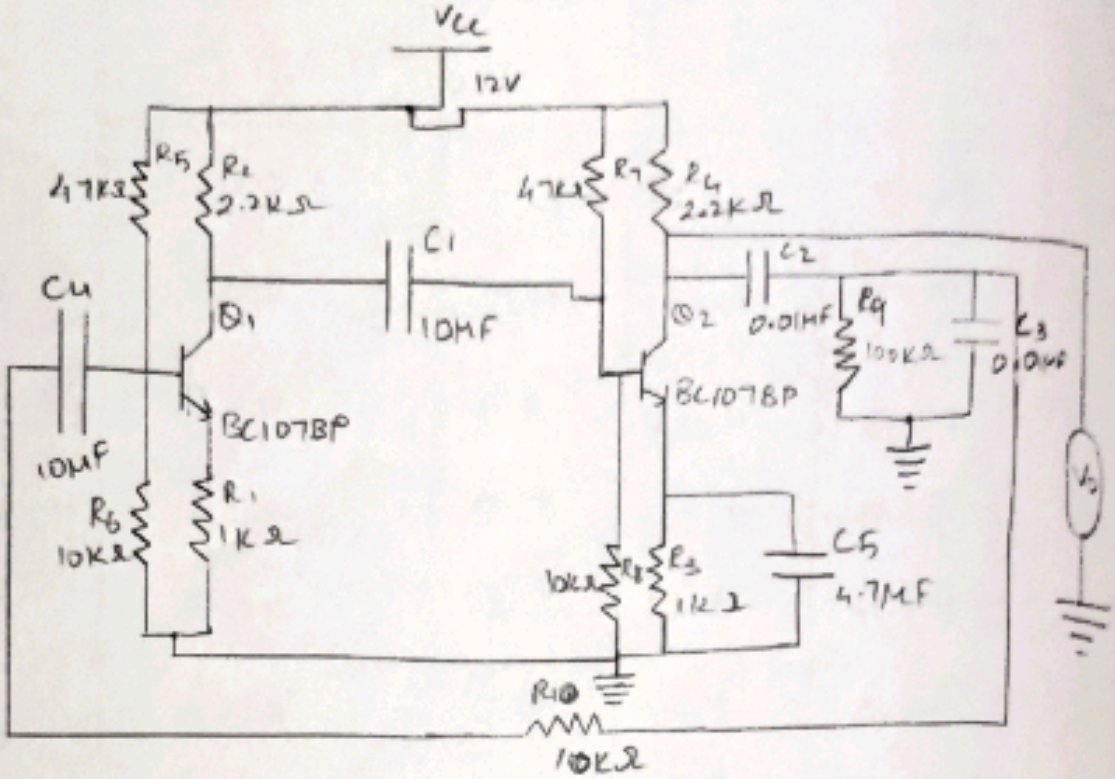

Model Graph:

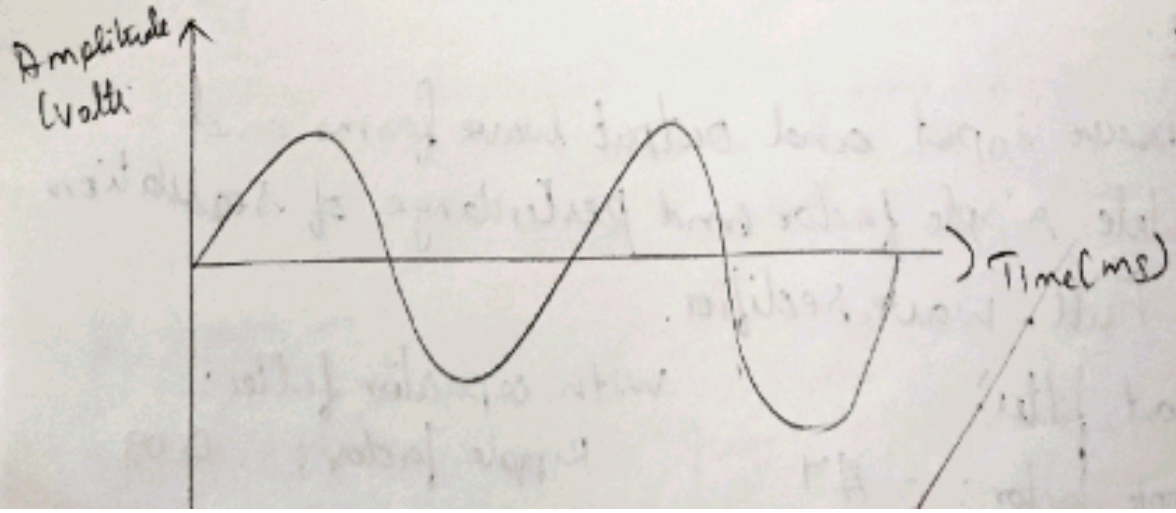

Tabulation

Amplitude	Time period	Practical frequency	Theoretical frequency
3.8V	0.64mS	1562 Hz	1592 Hz
4.0V	0.63mS	1587 Hz	1592 Hz
4.1V	0.62mS	1612 Hz	1592 Hz
3.9V	0.63mS	1587 Hz	1592 Hz
4.2V	0.61mS	1639 Hz	1592 Hz
3.7V	0.64mS	1562 Hz	1592 Hz
4.0V	0.62ms	1612 Hz	1592 Hz
3.9V	0.63mS	1587 Hz	1592 Hz
4.1V	0.61ms	1639 Hz	1592 Hz
3.8V	0.64ms	1562 Hz	1592 Hz

Calculation:

Theoretical frequency

$R = 10k\Omega$

$C = 0.01\mu F = 0.01 \times 10^{-6} F$

$f = \frac{1}{2\pi RC}$

$= \frac{1}{2 \times 3.14 \times 10{,}000 \times 10.01 \times 10^{-4}}$

$= \frac{1}{2 \times 3.14 \times 10^{4} \times 10^{-8}}$

$f = 1592 Hz$

$= 1.59 KHz$

Practical frequency

$T = 0.63 mS$

$= 0.63 \times 10^{-3} S$

$f = \frac{1}{T}$

$= \frac{1}{0.63 \times 10^{-3}}$

$= 1587 Hz$

$f = 1.58 KHz$

Result:-

Thus the wein bridge oscillator was designed and simulated using LT spice and constructed for the given cut off frequency.

Theoretical frequency: 1.59 KHz

Practical frequency: 1.58 KHz